Fabas Luce S.p.a.
Via Luigi Talamoni 75,
20861 BRUGHERIO MB - ITALY
Tel. +39 039 890691
Fax. +39 039 2142208
info@fabasluce.it - www.fabasluce.it

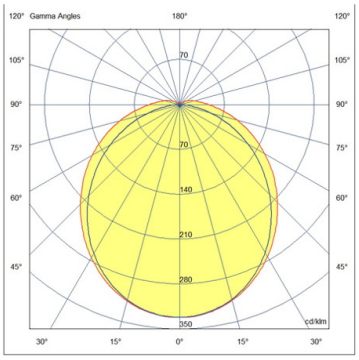

STARFIX 20-630 120V NW 9016 PC OPAL INOX

6955-54-107

21,5 W outdoor open deck LED fixture. Stainless steel AISI 316L housing – length 630 mm

Lighting features	
LED Characteristics	**SMD**
Number of LEDs	**140**
Light Source Lumen	**3065 lm**
Item Lumen	**2624 lm**
Light Source Efficiency	**163 lm/W @85°C**
Item Efficiency	**122 lm/W @85°C**
Color Temperature	**White 4000K**
Optics	**180°**
Typical CRI	**92**
Minimum CRI	**90**
SDCM	**3 STEP**
Photobiological Risk	**RG0**
Energy Efficiency Class	A↑G D

Electrical features	
Input Voltage	**120/277V AC 50/60Hz**
Total Absorbed Power	**21,5W**
Power Factor	**>0,98**
Control System	**On/Off**
Driver	**Included**
Power Supply Type	**Costant Current**
Driver Output	**500mA**
Driver Input	**108-305V AC 50/60Hz**
Driver Protection	**Mains surge 2Kv**
Through-Wiring	**Yes, in the lamp**

Mechanical features	
Housing material	**Stainless steel AISI 316L**
Surface treatment	**Polyester Painting**
Housing color	**White RAL 9016**
IP	**IP66 / IP67**
IK	**10**
Diffuser / Protective shield	**Opal policarbonate flame rating V0 (UL94), UV resistent**
Cable gland, cable Ø min-max	**M20 nickel plated brass - Cable Ø 8-15mm**
Clips	**Yes, Stainless steel AISI 316SS**
Mounting	**M8 treaded pin with nut on preinstalled bushing, all stainles steel AISI 316L**
Operating ambient temperature	**-25°C / +55°C**
Storage ambient temperature	**-25°C / +70°C**
Item Dimensions	**629x82x133mm - 2,4kg**

Others	
Luminous Flux Maintenance	**L80 B10 >75.000**
Driver Lifespan	**100.000 h with failure rate less than 10%**
Packaging Dimensions	**690x110x170mm - 2.7kg**
International standard compliance	**EN 60598-1; EN 60598-2-1; EN 62471 + TR62778; EN IEC 63000:2018**
Eancode	**8019282574262**
Made In	**Italy**
Insulation Class	**CL1**

CE
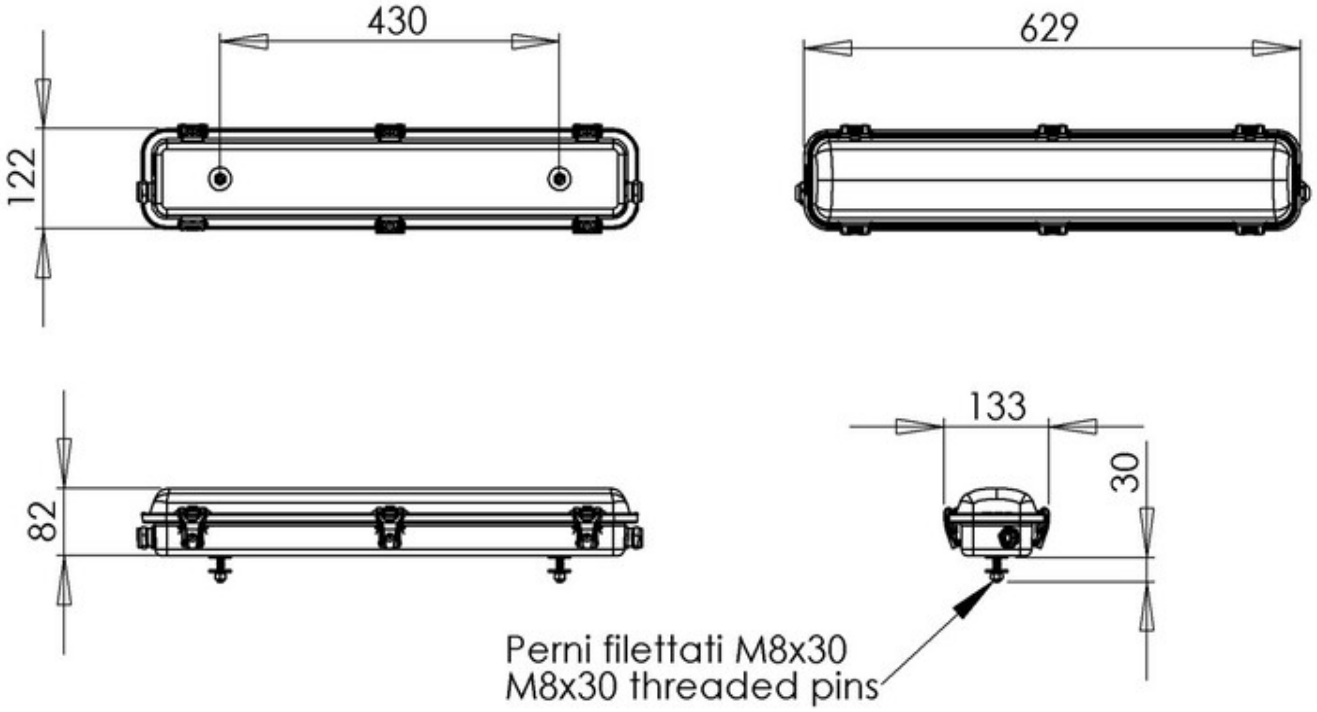
Fabas Luce S.p.a.
Via Luigi Talamoni 75,
20861 BRUGHERIO MB - ITALY
Tel. +39 039 890691
Fax. +39 039 2142208
info@fabasluce.it - www.fabasluce.it