Fabas Luce S.p.a.
Via Luigi Talamoni 75,
20861 BRUGHERIO MB - ITALY
Tel. +39 039 890691
Fax. +39 039 2142208
info@fabasluce.it - www.fabasluce.it

EBLAN NET

6923-04-006

Wall mounting bracket with electronic power unit box and connectorized cord for lantern recharge.

Electrical features	
Input Voltage	**100/240V AC 50/60Hz**
Total Absorbed Power	**15W**
Power Supply Type	**Costant Voltage**
Driver Output	**15VDC**
Driver Protection	**Mains surge 1kV**
Through-Wiring	**No**

Mechanical features	
Housing material	**Metal frame**
Surface treatment	**Polyester Painting**
Housing color	**Red RAL 3001**
IP	**IP66**
IK	**09**
Cable gland, cable Ø min-max	**n°1 PG M20x1.5, Øcable min 6mm - max 12mm; n°1 PG M16x1.5 Øcable min 5mm - max 10mm**
Operating ambient temperature	**-20°C / +55°C**
Storage ambient temperature	**-40°C / +80°C**
Item Dimensions	**125x80x380mm - 1,5kg**

Others	
Packaging Dimensions	**170x130x400mm - 2kg**
International standard compliance	**IEC 60533; IEC60092-306**
Eancode	**8019282564928**
Made In	**Italy**
Insulation Class	**CL1**

CE
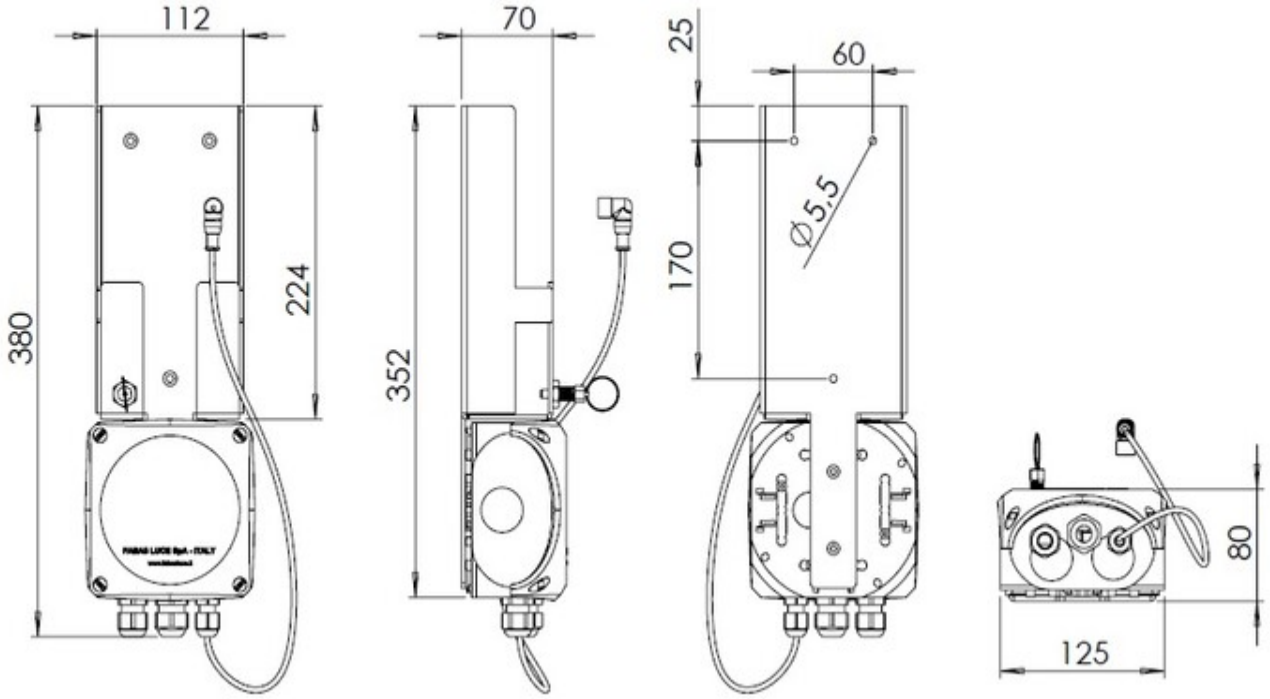
Fabas Luce S.p.a.
Via Luigi Talamoni 75,
20861 BRUGHERIO MB - ITALY
Tel. +39 039 890691
Fax. +39 039 2142208
info@fabasluce.it - www.fabasluce.it