Fabas Luce S.p.a.
Via Luigi Talamoni 75,
20861 BRUGHERIO MB - ITALY
Tel. +39 039 890691
Fax. +39 039 2142208
info@fabasluce.it - www.fabasluce.it

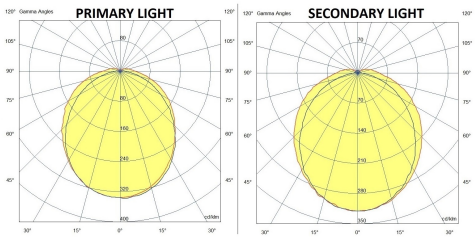

TVE-ST 22+5W NW+RED 7040 SW ON-OFF

6868-94-012

White + Red independent LED lights in the same fixture. Light color selection with remote control. On / Off Switch on the fixture. Housing Grey RAL 7040.

Lighting features		
	Light Source 1	**Light Source 2**
LED Characteristics	**SMD**	**SMD**
Number of LEDs	**60**	**36**
Light Source Lumen	**3250 lm**	
Item Lumen	**2645 lm**	**105 lm**
Light Source Efficiency	**185 lm/W @85°C**	
Item Efficiency	**120 lm/W @85°C**	**20 lm/W @85°C**
Color Temperature	**White 4000K**	**Red Dominant Wavelength: >619nm <625nm**
Optics	**180°**	**180°**
Typical CRI	**85**	
Minimum CRI	**80**	
SDCM	**3 STEP**	
Photobiological Risk	**RG0**	**RG0**
Energy Efficiency Class	A↑G C	

Mechanical features	
Housing material	**Die-cast aluminum copper free EN AB 44100**
Surface treatment	**Polyester Painting**
Housing color	**Grey RAL 7040**
IP	**IP66**
IK	**10**
MIL-S 9001D Grade A- Class I – Type A	**SI**
Diffuser / Protective shield	**Opal policarbonate flame rating V0 (UL94), UV resistent**
Cable gland, cable Ø min-max	**N°4 PG M20x1.5, Øext. cable: min 6mm - max 12mm**
Mounting	**With stainless steel brackets AISI 316L; fixing with M8 screws**
Corrosion category	**Salt Spray Resistance ASTM B117 >1500 hours**
Operating ambient temperature	**-25°C / +55°C**
Storage ambient temperature	**-25°C / +85°C**
Item Dimensions	**400x100x171mm - 2,40kg**

Electrical features		
	Electrical specifications 1	**Electrical specifications 2**
Input Voltage	**100/240V AC 50/60Hz**	**100/240V AC 50/60Hz**
Total Absorbed Power	**22W**	**5W**
Power Factor	**> 0,9**	**0,4C**
Control System	**On/Off**	**On/Off**
Driver	**Included**	**Included**
Power Supply Type	**Costant Current**	**Costant Voltage**
Driver Output	**1050mA**	**24VDC**
Driver Input	**100-240V~ 50/60Hz**	**100-240V~ 50/60Hz**
Driver Protection	**Mains surge 1kV**	**Mains surge 2Kv**
Through-Wiring	**Yes, in the junction box**	**Yes, in the junction box**

Others	
Luminous Flux Maintenance	**L80 100000h**
Driver Lifespan	**100000h**
Packaging Dimensions	**490x130x190mm - 2.5kg**
International standard compliance	**EN 60598-1; EN 60598-2-1; IEC 60092-306; IEC 60533; EN 62471 + TR62778; EN55015; EN 61547-1; EN61000-3-2; EN61000-3-3**
Eancode	**8019282578093**
Made In	**Italy**
Insulation Class	**CL1**

CE
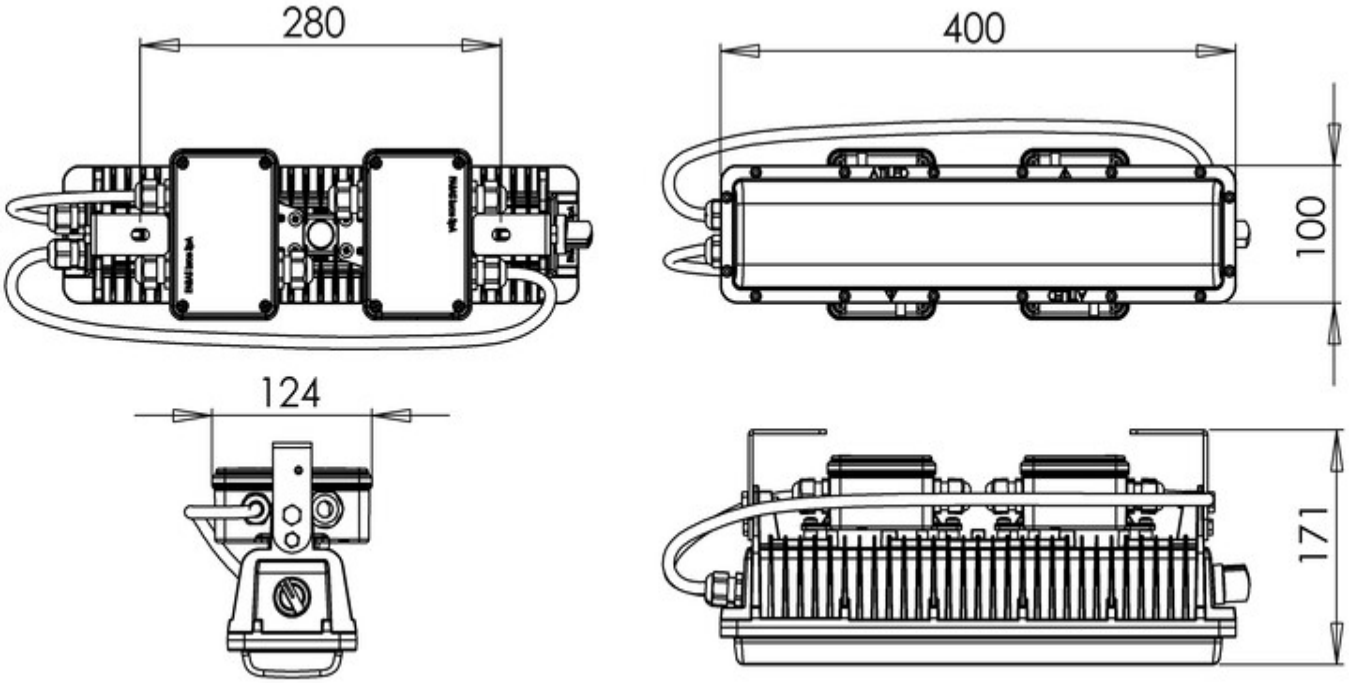
Fabas Luce S.p.a.
Via Luigi Talamoni 75,
20861 BRUGHERIO MB - ITALY
Tel. +39 039 890691
Fax. +39 039 2142208
info@fabasluce.it - www.fabasluce.it