Fabas Luce S.p.a.
Via Luigi Talamoni 75,
20861 BRUGHERIO MB - ITALY
Tel. +39 039 890691
Fax. +39 039 2142208
info@fabasluce.it - www.fabasluce.it

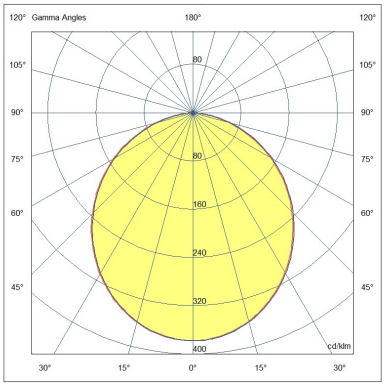

PSAR2 R DALI

6823-10-256

Red Light - Recessed fixture for living rooms

Lighting features	
LED Characteristics	**SMD**
Number of LEDs	**30**
Item Lumen	**61 lm**
Item Efficiency	**13 lm/W @85°C**
Color Temperature	**Red Dominant Wavelength: >619nm <625nm**
Optics	**Opal**
Photobiological Risk	**RG0**

Electrical features	
Input Voltage	**220/240V 0-50/60Hz**
Total Absorbed Power	**5W**
Power Factor	**> 0,95**
Control System	**DALI**
Driver	**Included**
Power Supply Type	**Costant Voltage**
Driver Output	**24VDC**
Driver Input	**220/240V 0-50/60Hz**
Driver Protection	**Mains surge 1kV; (L/N - PE) 2kV**

Mechanical features	
Housing material	**Aluminum frame**
Housing color	**White RAL 9010**
IP	**IP44 Front side**
Diffuser / Protective shield	**Opal policarbonate**
Mounting	**Recessed**
Hole dimension	**180**
Cable	**Cm.35 - H05RN-F 2x1**
Operating ambient temperature	**-20°C / +45°C**
Storage ambient temperature	**-20°C / +60°C**
Item Dimensions	**55mm Ø207mm - 0,7kg**

Others	
Luminous Flux Maintenance	**L80 50000h**
Driver Lifespan	**100000**
Packaging Dimensions	**300x80x210mm - 1kg**
International standard compliance	**EN 60598-1; EN60598-2-2; EN62471 + IEC TR 62778; EN55015; EN61000-3-2; EN61000-3-3; EN 50581;**
Eancode	**8019282106821**
Insulation Class	**CL2**

CE
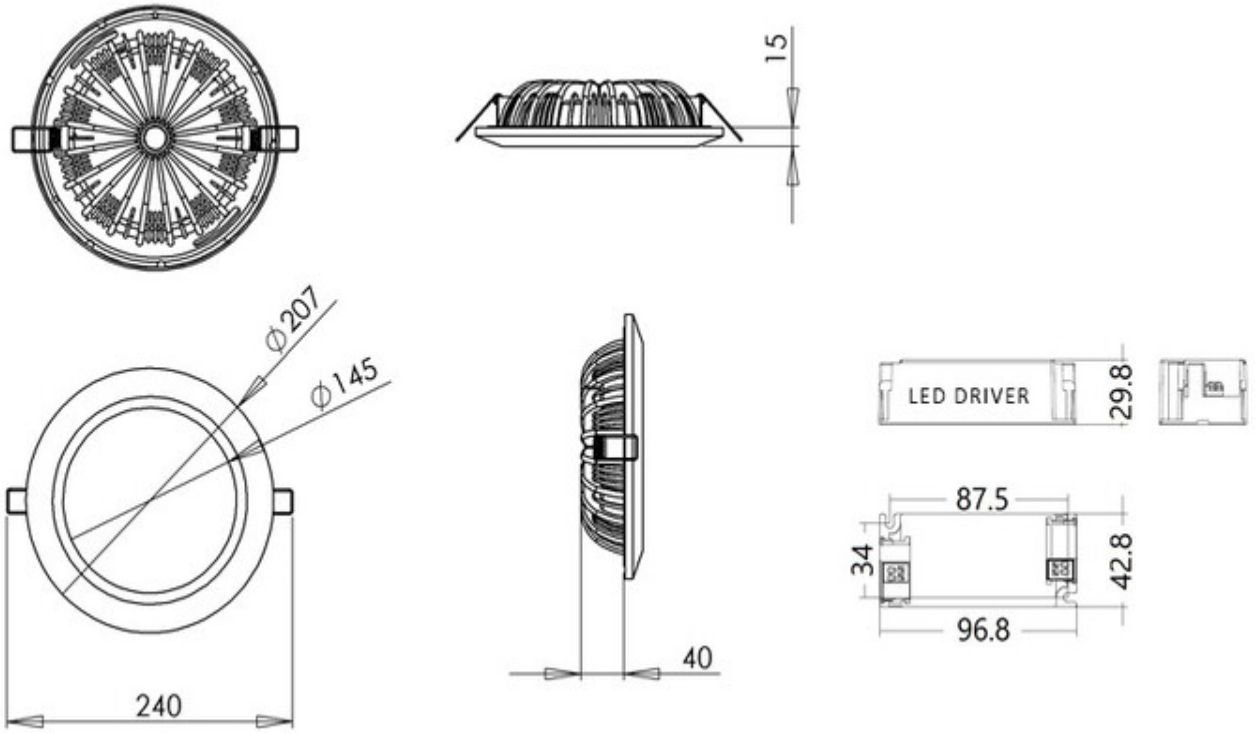
Fabas Luce S.p.a.
Via Luigi Talamoni 75,
20861 BRUGHERIO MB - ITALY
Tel. +39 039 890691
Fax. +39 039 2142208
info@fabasluce.it - www.fabasluce.it