Fabas Luce S.p.a.
Via Luigi Talamoni 75,
20861 BRUGHERIO MB - ITALY
Tel. +39 039 890691
Fax. +39 039 2142208
info@fabasluce.it - www.fabasluce.it

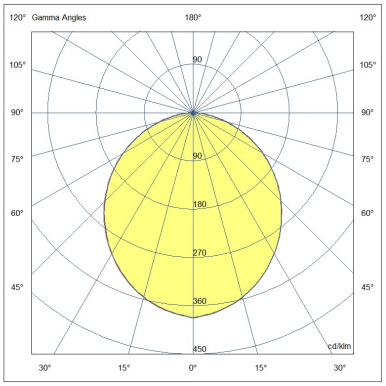

PSAR2 18W WW 24VDC

6823-02-253

Recessed fixture for living rooms - Direct input 24V DC

Lighting features	
LED Characteristics	**SMD**
Number of LEDs	**42**
Light Source Lumen	**2150 lm**
Item Lumen	**1600 lm**
Light Source Efficiency	**119 lm/W @85°C**
Item Efficiency	**89 lm/W @85°C**
Color Temperature	**White 3000K**
Optics	**Opal**
Minimum CRI	**80**
Photobiological Risk	**RG0**
Energy Efficiency Class	A↑G E

Electrical features	
Input Voltage	**24V DC**
Total Absorbed Power	**18W**
Control System	**On/Off**
Driver	**Not included**

Mechanical features	
Housing material	**Aluminum frame**
Housing color	**White RAL 9010**
IP	**IP44 Front side**
MIL-S 9001D Grade A- Class I – Type A	**SI**
Diffuser / Protective shield	**Opal policarbonate**
Hole dimension	**180**
Cable	**cm.35 H05RN-F 2x1 with M/F connector**
Operating ambient temperature	**-20°C / +45°C**
Storage ambient temperature	**-20°C / +60°C**
Item Dimensions	**55mm Ø207mm - 0,7kg**

Others	
Luminous Flux Maintenance	**L80 50000h**
Packaging Dimensions	**230x80x210mm - 1kg**
International standard compliance	**EN 60598-1; EN60598-2-2; EN62471 + IEC TR 62778; EN55015; EN61000-3-2; EN61000-3-3; EN 50581;**
Eancode	**8019282549598**
Insulation Class	**CL3**

CE
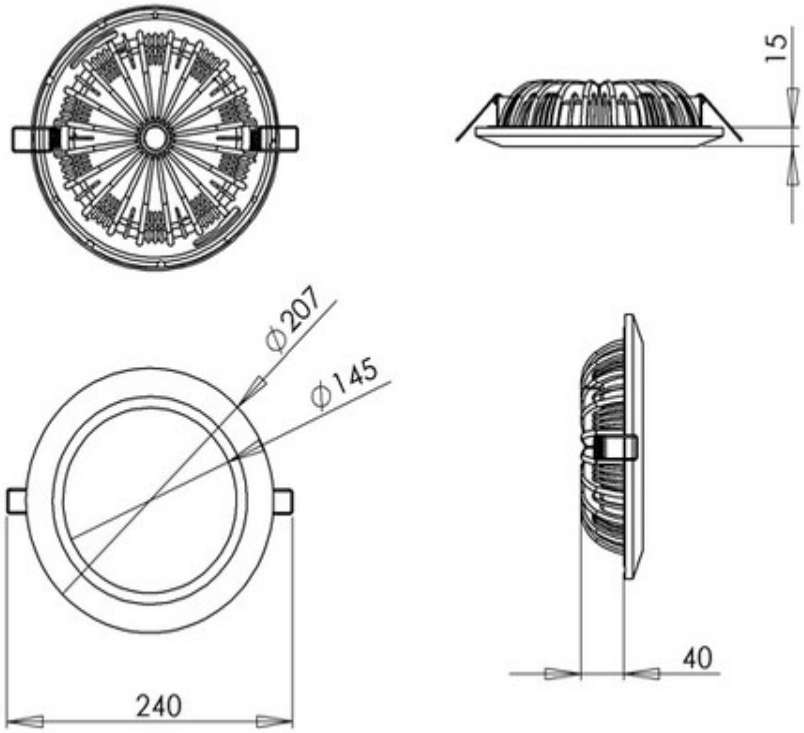
Fabas Luce S.p.a.
Via Luigi Talamoni 75,
20861 BRUGHERIO MB - ITALY
Tel. +39 039 890691
Fax. +39 039 2142208
info@fabasluce.it - www.fabasluce.it