Fabas Luce S.p.a.
Via Luigi Talamoni 75,
20861 BRUGHERIO MB - ITALY
Tel. +39 039 890691
Fax. +39 039 2142208
info@fabasluce.it - www.fabasluce.it

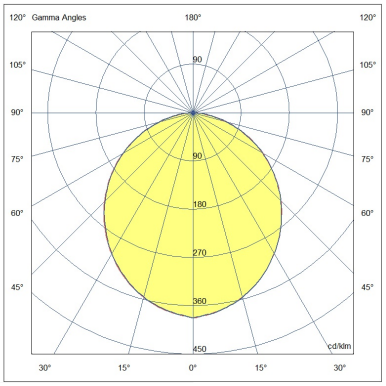

PSAR2 13W WW

6823-02-202

Recessed fixture for living rooms

Lighting features	
LED Characteristics	**SMD**
Number of LEDs	**48**
Light Source Lumen	**1513 lm**
Item Lumen	**1180 lm**
Light Source Efficiency	**141 lm/W @85°C**
Item Efficiency	**91 lm/W @85°C**
Color Temperature	**White 3000K**
Optics	**Opal**
Minimum CRI	**80**
SDCM	**3 STEP**
Photobiological Risk	**RG0**
Energy Efficiency Class	A↑G E

Electrical features	
Input Voltage	**110/127V AC - 220/240V AC 50/60Hz - 176-280V DC**
Total Absorbed Power	**13W**
Power Factor	**> 0,9**
Control System	**On/Off**
Driver	**Included**
Power Supply Type	**Costant Current**
Driver Output	**300mA**
Driver Input	**99-264VAC 50/60Hz 176-280VDC**
Driver Protection	**Mains surge 1kV; (L/N - PE) 2kV**

Mechanical features	
Housing material	**Aluminum frame and polycarbonate**
Housing color	**White RAL 9010**
IP	**IP44 Front side**
Mounting	**Recessed**
Hole dimension	**180**
Cable	**Cm.35 - H05RN-F 2x1 (for power supply); 1.0m H05RN-F 2x0.75 (driver-lamp)**
Operating ambient temperature	**-20°C / +45°C**
Storage ambient temperature	**-20°C / +60°C**
Item Dimensions	**55mm Ø207mm - 0,7kg**

Others	
Luminous Flux Maintenance	**L80 50000h**
Driver Lifespan	**80000**
Packaging Dimensions	**300x80x210mm - 1kg**
International standard compliance	**EN 60598-1; EN60598-2-2; EN62471 + IEC TR 62778; EN55015; EN61000-3-2; EN61000-3-3; EN 50581;**
Eancode	**8019282575375**
Insulation Class	**CL2**

CE
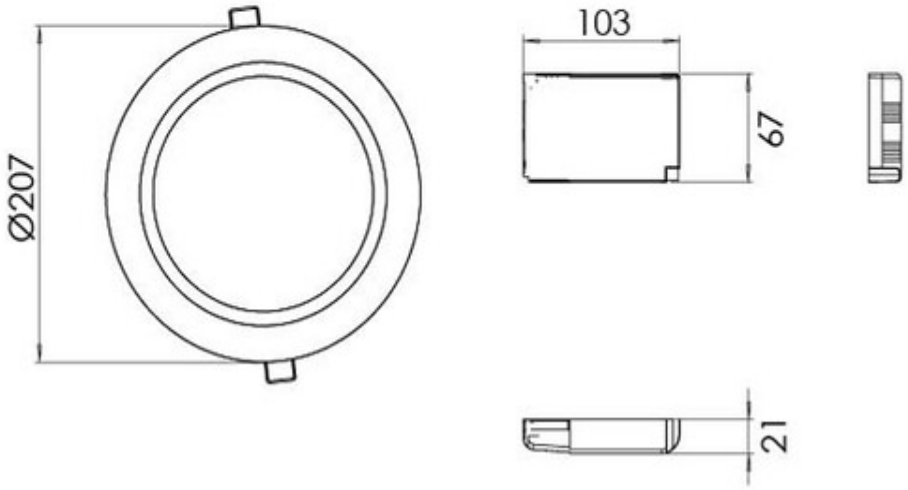
Fabas Luce S.p.a.
Via Luigi Talamoni 75,
20861 BRUGHERIO MB - ITALY
Tel. +39 039 890691
Fax. +39 039 2142208
info@fabasluce.it - www.fabasluce.it