**Fabas Luce S.p.a.**
Via Luigi Talamoni 75,
20861 BRUGHERIO MB - ITALY
Tel. +39 039 890691
Fax. +39 039 2142208
info@fabasluce.it - www.fabasluce.it

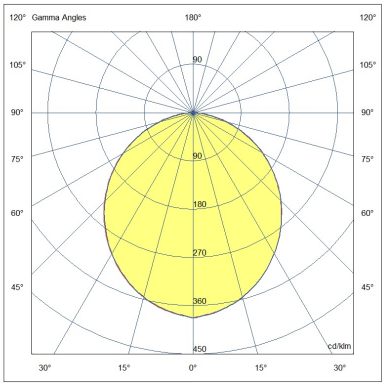


## PSAR2 16,5W WW

# 6823-02-201

Recessed fixture for living rooms

| Lighting features | |
|---|---|
| LED Characteristics | **SMD** |
| Number of LEDs | **48** |
| Light Source Lumen | **2030 lm** |
| Item Lumen | **1600 lm** |
| Light Source Efficiency | **141 lm/W @85°C** |
| Item Efficiency | **97 lm/W @85°C** |
| Color Temperature | **White 3000K** |
| Optics | **Opal** |
| Minimum CRI | **80** |
| SDCM | **3 STEP** |
| Photobiological Risk | **RG0** |
| Energy Efficiency Class | A↑G E |

| Electrical features | |
|---|---|
| Input Voltage | **110/127V AC - 220/240V AC 50/60Hz - 176-280V DC** |
| Total Absorbed Power | **16,5W** |
| Power Factor | **> 0,9** |
| Control System | **On/Off** |
| Driver | **Included** |
| Power Supply Type | **Costant Current** |
| Driver Output | **400mA** |
| Driver Input | **99-264VAC 50/60Hz 176-280VDC** |
| Driver Protection | **Mains surge 3Kv** |

| Mechanical features | |
|---|---|
| Housing material | **Aluminum frame and polycarbonate** |
| Housing color | **White RAL 9010** |
| IP | **IP44 Front side** |
| Mounting | **Recessed** |
| Hole dimension | **205** |
| Cable | **Cm.35 - H05RN-F 2x1 (for power supply); 1.0m H05RN-F 2x0.75 (driver-lamp)** |
| Operating ambient temperature | **-20°C / +45°C** |
| Storage ambient temperature | **-20°C / +60°C** |
| Item Dimensions | **55mm Ø320mm - 1,3kg** |

| Others | |
|---|---|
| Luminous Flux Maintenance | **L80 50000h** |
| Driver Lifespan | **80000** |
| Packaging Dimensions | |
| International standard compliance | **EN 60598-1; EN60598-2-2; EN62471 + IEC TR 62778; EN55015; EN61000-3-2; EN61000-3-3; EN 50581;** |
| Eancode | **8019282575368** |
| Insulation Class | **CL2** |

CE
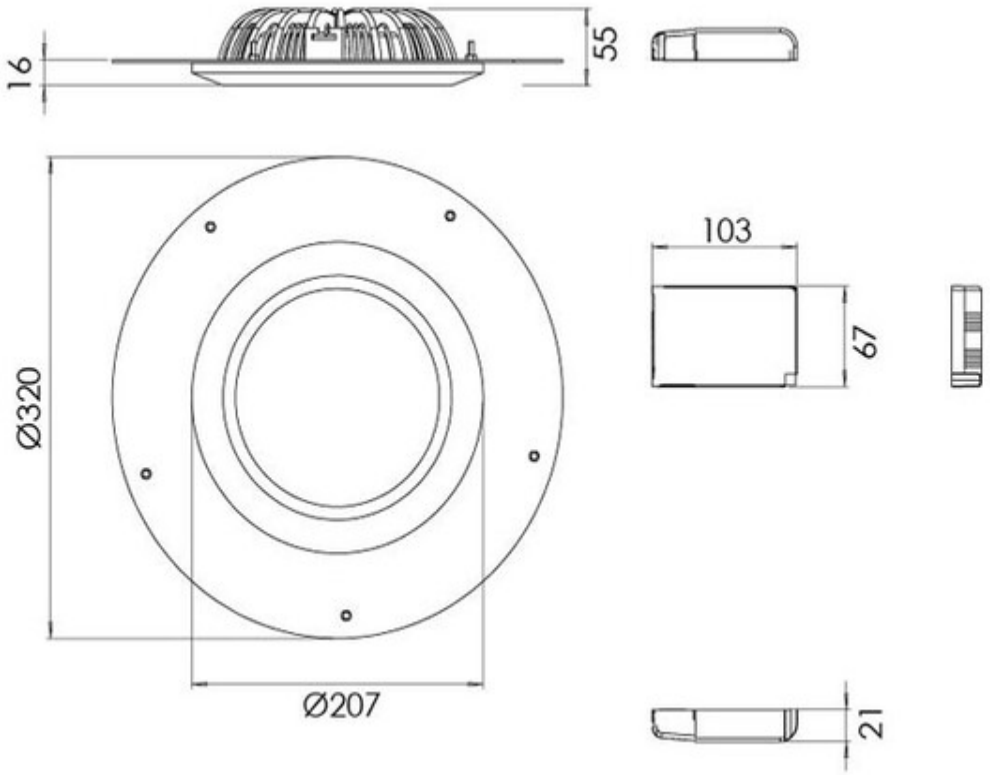
**Fabas Luce S.p.a.**
Via Luigi Talamoni 75,
20861 BRUGHERIO MB - ITALY
Tel. +39 039 890691
Fax. +39 039 2142208
info@fabasluce.it - www.fabasluce.it